Partnership. With Guarantee.

# Stainless steel ball valves
# Series BA125



| | |
|---|---|
| Design type | Full port ball valve with floating ball, full bore passage, free shaft end |
| Connection | G1/4"...G4" according to ISO228 |
| Materials | Housing Stainless steel 1.4401 polished,  Ball Stainless steel 1.4401, Ball seal PTFE, Spindle seal PTFE, O-rings EPDM-Perox |
| Application range | Fluids and gases of group 1 and 2 in accordance with PED 2014/68/EU that do not attack the materials used. |
| Medium temperature | -45...+150°C |
| Operating pressure | 0bar up to Nominal pressure according to table and pressure-temperature diagram |
| Mounting type | Installation in rigid piping system |
| Mounting position | any |
| Special versions | antistatic version ATEX II 2G/D T4, oil-, grease- and silicone-free for oxygen |



+43 512 52076
austria@stasto.eu
© STASTO Automation KG

## Dimensions

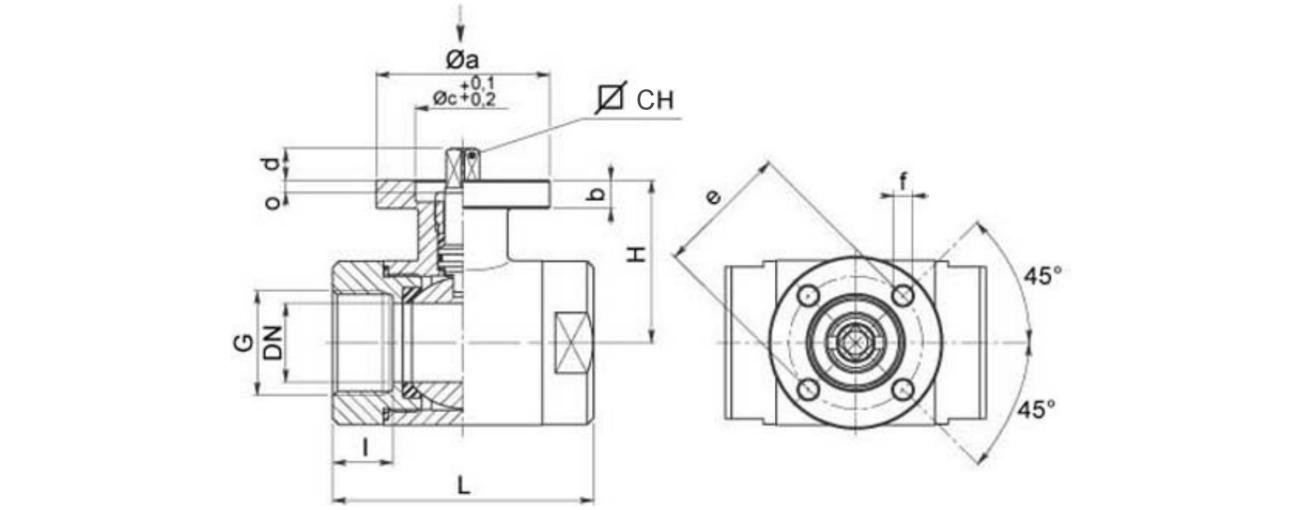


| Connection G | Nominal size DN[mm] | PN [bar] | Øa | b | Øc | d | e | f | H | CH | Kv value [m³/h] | Weight [approx. kg] | Type |
|---|---|---|---|---|---|---|---|---|---|---|---|---|---|
| 1/4" | 9 | 100 | 46 | 9 | 25 | 8 | 36 | 4x5,5 | 39 | 9 | - | 0,35 | BA125-14-B |
| 1/4" | 9 | 100 | 54 | 9 | 30 | 10 | 42 | 4x5,5 | 39 | 11 | - | 0,39 | BA125-14-B-01 |
| 3/8" | 10 | 100 | 46 | 9 | 25 | 8 | 36 | 4x5,5 | 39 | 9 | - | 0,34 | BA125-38-B |
| 3/8" | 10 | 100 | 54 | 9 | 30 | 10 | 42 | 4x5,5 | 39 | 11 | - | 0,38 | BA125-38-01 |
| 1/2" | 15 | 100 | 46 | 9 | 25 | 8 | 36 | 4x5,5 | 41,5 | 9 | - | 0,45 | BA125-12-B |
| 1/2" | 15 | 100 | 54 | 9 | 30 | 10 | 42 | 4x5,5 | 41,5 | 11 | - | 0,50 | BA125-12-01 |
| 3/4" | 20 | 100 | 46 | 9 | 25 | 8 | 36 | 4x5,5 | 45 | 9 | - | 0,66 | BA125-34-B |
| 3/4" | 20 | 100 | 54 | 9 | 30 | 10 | 42 | 4x5,5 | 45 | 11 | - | 0,68 | BA125-34-01 |
| 1" | 25 | 64 | 54 | 9 | 30 | 10 | 42 | 4x5,5 | 51,5 | 11 | - | 0,90 | BA125-10-B |
| 1" | 25 | 64 | 65 | 9 | 35 | 13 | 50 | 4x6,5 | 51,5 | 14 | - | 0,95 | BA125-10-01 |
| 11/4" | 32 | 64 | 54 | 9 | 30 | 10 | 42 | 4x5,5 | 56,5 | 11 | - | 1,30 | BA125-114-B |
| 11/4" | 32 | 64 | 65 | 9 | 35 | 13 | 50 | 4x6,5 | 56,5 | 14 | - | 1,34 | BA125-114-01 |
| 11/2" | 40 | 64 | 65 | 12 | 35 | 13 | 50 | 4x6,5 | 76 | 14 | - | 2,31 | BA125-112-B |
| 11/2" | 40 | 64 | 60 | 12 | 55 | 15 | 70 | 4x8,5 | 76 | 17 | - | 2,48 | BA125-112-01 |
| 2" | 50 | 40 | 65 | 12 | 35 | 13 | 50 | 4x6,5 | 84 | 14 | - | 3,40 | BA125-20-B |
| 2" | 50 | 40 | 90 | 12 | 55 | 15 | 70 | 4x8,5 | 84 | 17 | - | 3,56 | BA125-20-01 |
| 21/2" | 65 | 40 | 90 | 12 | 55 | 15 | 70 | 4x8,5 | 94,5 | 17 | - | 5,75 | BA125-212-B |
| 21/2" | 65 | 40 | 125 | 12 | 70 | 18 | 102 | 4x10,5 | 94,5 | 22 | - | 6,25 | BA125-212-01 |
| 3" | 80 | 40 | 90 | 12 | 55 | 15 | 70 | 4x8,5 | 106 | 17 | - | 8,93 | BA125-30-B |
| 3" | 80 | 40 | 125 | 12 | 70 | 18 | 102 | 4x10,5 | 106 | 22 | - | 9,43 | BA125-30-01 |
| 4" | 100 | 25 | 90 | 12 | 55 | 15 | 70 | 4x8,5 | 120 | 17 | - | 14,80 | BA125-40-B |
| 4" | 100 | 25 | 125 | 12 | 70 | 18 | 102 | 4x10,5 | 120 | 22 | - | 15,70 | BA125-40-01 |


+43 512 52076
austria@stasto.eu
© STASTO Automation KG

## Pressure-temperature diagram

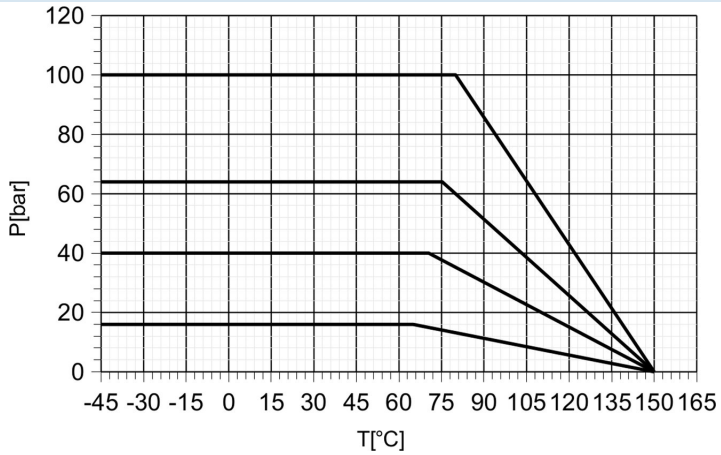


Illustrations non-binding
Design, dimensional and material changes reserved




+43 512 52076
austria@stasto.eu
© STASTO Automation KG