STASTO
Partnership. With Guarantee.

Check valve
Series CH058



Design type	Wafer check valve, metal-to-metal sealing, Installation length according to DIN EN558-1-R49
Tightness	corresponding DIN3230 BN3, for gaseous media we recommend soft seal
Connection	Flanges DN15...DN100 according to EN1092
Flange type	DN15...DN80 PN6-PN40, DN100 PN10-40, DN15...DN100 ANSI150-300
Materials	Body stainless steel 1.4408, Disc stainless steel AISI316L, Spring Stainless steel 1.4401
Medium temperature	-55...+250°C
Operating pressure	max. 52bar up to medium temperature 50°C, Permissible operating pressure for higher temperatures see pressure-temperature diagram
Mounting type	Installation in rigid piping system
Mounting position	horizontal or vertical
Application range	Fluids and gases of group 1 and 2 in accordance with PED 2014/68/EU that do not attack the materials used.
Special versions	without spring, other opening pressures, Soft seals for higher tightness

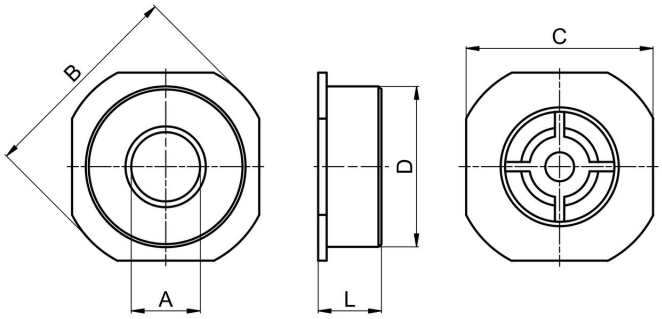

DN[mm]	A	B	C	D	L	Kv value [m3/h]	Weight [approx. kg]	Type
15	15	53	45	42	16	3,0	0,11	CH058-15
20	20	63	55	46	19	4,8	0,14	CH058-20
25	24	73	65	55,5	22	6,8	0,26	CH058-25
32	31	84	74	64	28	14,0	0,40	CH058-32
40	38	94	84	73,5	32	22,0	0,60	CH058-40
50	47	107	98	95	40	32,0	0,95	CH058-50
65	62	131	118	107	46	51,0	1,30	CH058-65
80	77	140	130	126	50	68,0	1,90	CH058-80
100	95	162	162	155	60	100,0	3,40	CH058-100

+43 512 52076
austria@stasto.eu
© STASTO Automation KG

Opening pressures in [mbar]

Flow direction			DN15	DN20	DN25	DN32	DN40	DN50	DN65	DN80	DN100
with standard spring		vertical from bottom to top	25	25	25	27	29	29	31	32	33
		horizontal	23	23	23	24	25	25	26	26	27
		vertical from top to bottom	21	21	21	21	21	21	21	21	21
without spring		vertical from bottom to top	2	2	2	3	4	4	5	5	6

Pressure-temperature diagram:

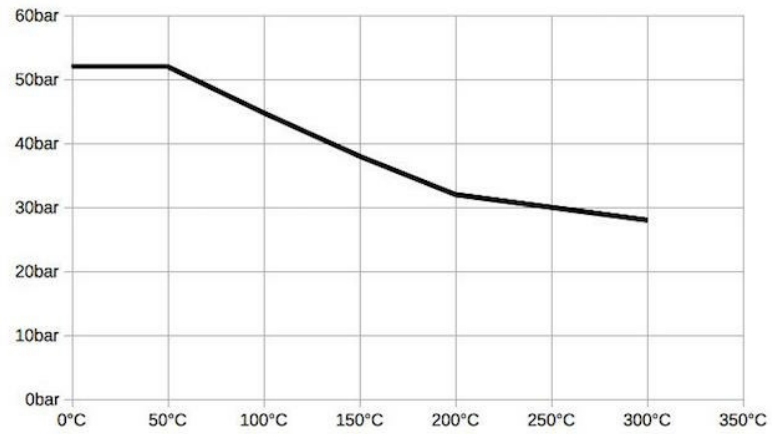

Medium temperature:

Seal	Temperature range [°C]	Application
NBR	-25...+95	neutral gases and liquids
EPDM	-35...+130	Hot water, Steam, Oxygen
FKM	-20...+200	Oils and fuels
PTFE	-55...+200	aggressive media

Pressure drop curve for water:

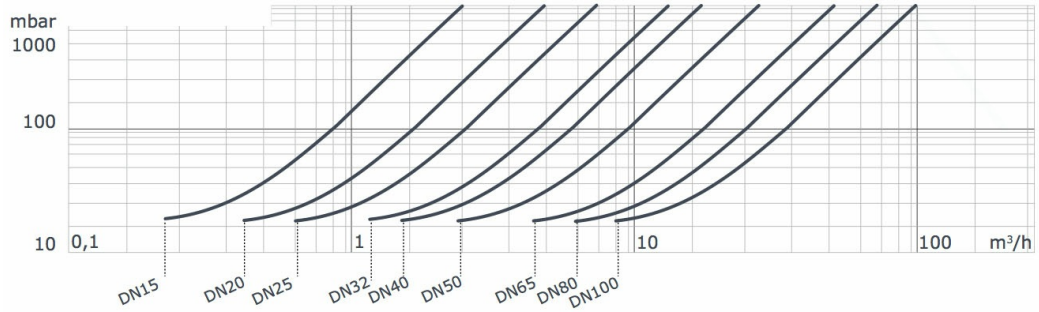

Illustrations non-binding
Design, dimensional and material changes reserved

+43 512 52076
austria@stasto.eu
© STASTO Automation KG