Partnership. With Guarantee.

Prirobnični krogelni ventil iz nerjavnega jekla Serija BA489-GLD-0H



Konstrukcija	Pretočni krogelni ventil s plavajočo kroglo, polni prehod
Aktiviranje	ročni pogon z gonilom
Priključek	vrtljive prirobnice v skladu z EN1092-1
Materiali	Ohišje Nerjavno jeklo 1.4404 polirano, Krogla Nerjavno jeklo 1.4404, krogljično tesnilo MPTFE, Tesnilo vretena PTFE, O-tesnilo EPDM, Gonilo Aluminijasto ohišje
Področje uporabe	Tekočine in plini skupine 1 in 2 v skladu s PED 2014/68/EU, ki ne napadajo uporabljenih materialov.
Temperatura medija	-20...+150°C
Način pritrditve	Vgradnja v togi cevovodni sistem
Položaj vgradnje	poljubno
Posebna izvedba	Gonilo z zaporno napravo izvedba brez olja in masti za vodik in kisik
Odobritve	Tovarniško potrdilo 3.1 ATEX II 2G Ex h IIC T4 Gb / II 2D Ex h IIIC T135°C Db

+43 512 52076
austria@stasto.eu
© STASTO Automation KG

Dimenzije DN80

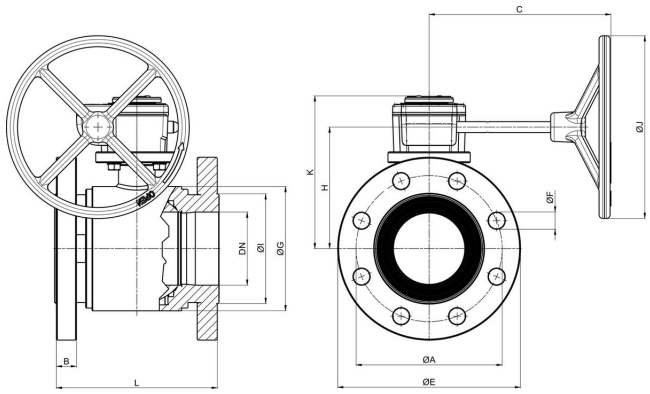

Nazivni premer DN[mm]	Prirobnica v skladu z EN1092-1	maks. Obratovalni tlak [bar]	A	B	C	ØE	F	ØG	H	ØI	ØJ	L	K	Kv-vrednost [m^3/h]	Teža [pribl. kg]	Tip
80	PN16/PN40	40	160	22	199	200	8 x Ø18	136	133	120	200	180	167,5	770	-	BA489-80-GLD-A0H3C
3301.V90-QM91 3301.V90-QM92 3301.V90-QM124 3301.V90-QM125 3301.V56-QM01 3301.V56-QM02 3301.V90-QM122 3301.V90-QM123 3301.V55-QM02 3301.V90-QM15 3301.V90-QM66 3302.V90-QM91 3302.V90-QM92 3302.V90-QM124 3302.V90-QM125 3302.V56-QM01 3302.V56-QM02 3302.V90-QM122 3302.V90-QM123 3302.V55-QM02 3302.V90-QM15 3302.V90-QM66 3303.V90-QM91 3303.V90-QM92 3303.V90-QM124 3303.V90-QM125 3303.V56-QM01 3303.V56-QM02 3303.V90-QM122 3303.V90-QM123 3303.V55-QM02 3303.V90-QM15 3303.V90-QM66 3304.V90-QM91 3304.V90-QM92 3304.V90-QM124 3304.V90-QM125 3304.V56-QM01 3304.V56-QM02 3304.V90-QM122 3304.V90-QM123 3304.V55-QM02 3304.V90-QM15 3304.V90-QM66 3305.V90-QM91 3305.V90-QM92 3305.V90-QM124 3305.V90-QM125 3305.V56-QM01 3305.V56-QM02 3305.V90-QM122 3305.V90-QM123 3305.V55-QM02 3305.V90-QM15 3305.V90-QM66 3306.V90-QM91 3306.V90-QM92 3306.V90-QM124 3306.V90-QM125 3306.V56-QM01 3306.V56-QM02 3306.V90-QM122 3306.V90-QM123 3306.V55-QM02 3306.V90-QM15 3306.V90-QM66 3307.V90-QM91 3307.V90-QM92 3307.V90-QM124 3307.V90-QM125 3307.V56-QM01 3307.V56-QM02 3307.V90-QM122 3307.V90-QM123 3307.V55-QM02 3307.V90-QM15 3307.V90-QM66 3308.V90-QM91 3308.V90-QM92 3308.V90-QM124 3308.V90-QM125 3308.V56-QM01 3308.V56-QM02 3308.V90-QM122 3308.V90-QM123 3308.V55-QM02 3308.V90-QM15 3308.V90-QM66 3309.V90-QM91 3309.V90-QM92 3309.V90-QM124 3309.V90-QM125 3309.V56-QM01 3309.V56-QM02 3309.V90-QM122 3309.V90-QM123 3309.V55-QM02 3309.V90-QM15 3309.V90-QM66 3310.V90-QM91 3310.V90-QM92 3310.V90-QM124 3310.V90-QM125 3310.V56-QM01 3310.V56-QM02 3310.V90-QM122 3310.V90-QM123 3310.V55-QM02 3310.V90-QM15 3310.V90-QM66 2511.V90-QM03 2511.V90-QM04 2522.V90-QM05 2511.V90-QM06 2511.V90-QM05 2522.V90-QM23 2511.V90-QM07 2511.V90-QM08 2522.V90-QM24 2511.V90-QM09 2511.V90-QM10 2522.V90-QM25 2511.V90-QM11 2511.V90-QM12 2522.V90-QM26 2511.V90-QM13 2511.V90-QM14 2522.V90-QM27 2511.V90-QM15 2511.V90-QM16 2522.V90-QM28 2511.V90-QM17 2511.V90-QM18 2522.V90-QM29 2511.V90-QM19 2511.V90-QM20 2522.V90-QM30 2511.V90-QM21 2511.V90-QM22 2522.V90-QM31																

Dimenzije DN100

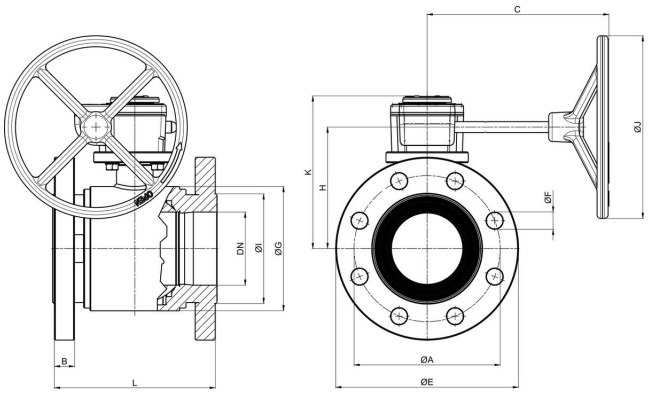

Nazivni premer DN[mm]	Prirobnica v skladu z EN1092-1	maks. Obratovalni tlak [bar]	A	B	C	ØE	F	ØG	H	ØI	ØJ	L	K	Kv-vrednost [m^3/h]	Teža [pribl. kg]	Tip
100	PN16/PN25	25	190	24	199	235	8 x Ø22	167	147	140	200	190	181,5	1200	-	BA489-100-GLD-A0H3C
2513.V90-QM05 2513.V90-QM72 2513.V90-QM73 2513.V90-QM74 2513.V90-QM75 2513.V90-QM76 2513.V90-QM77 2513.V90-QM78 2513.V90-QM79 2513.V90-QM80																

Ilustracije nezavezujoče Pridržujemo si pravico do konstrukcijskih, dimenzijskih in materialnih sprememb.

© STASTO Automation KG