Partnership. With Guarantee.

Maintenance unit G11/4"...G11/2" Series Gold MU304

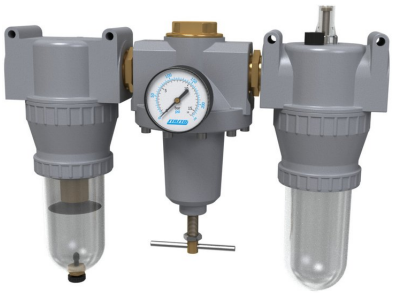

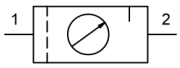

Design type	Diaphragm pressure regulator with secondary venting, Centrifugal force principle filter, Sintered filter element, Proportional lubricator, Oil filling under pressure possible
Connection	G11/4"...G11/2" according to ISO228/1
Materials	Housing Zinc die casting, Oil and condensate reservoir Polycarbonate or Metal
Function	Pressure regulation with filtration and enrichment of the compressed air with oil
Filter element	40µm
Mounting type	Installation in piping system or Wall mounting using mounting bracket
Mounting position	vertical, Drain screw bottom
Medium	Compressed air
Oil recommendation	HP32A (Temperature range 0...50°C), NR32 (Temperature range -35...85°C)
Oil metering	1...2 drops/min at Q_N = 1000 Nl/min
Medium temperature	with plastic bowl 0...+60°C, with metal bowl 0...+60°C (with appropriately conditioned compressed air -10...+60°C)
Ambient temperature	with plastic bowl 0...+60°C, with metal bowl -10...+60°C
Inlet pressure	1,5...16bar or rather 1,5...20bar loud table, with automatic drain valve 1,5...16bar
Control ranges	0,5...10bar and 0,5...16bar with metal bowl (0,5...3/ 0,5...6 on request)
Flow direction	is marked by an arrow
Scope of delivery	including pressure gauge
Special version	Inlet pressure 25bar

Order code

		MU304 - 114 - 0,5/10 - P - A1
	11/4"	114
Connection	11/2"	112
Pressure range	0,5...10bar	0,5/10
	0,5...16bar	0,5/16
Reservoir	Plastic reservoir (Leave blank)	
	Plastic reservoir with protective cage	P
	Metal container	M
Drain valve	semi-automatic drain valve (Leave blank)	
	automatic drain valve	A1

+43 512 52076
austria@stasto.eu
© STASTO Automation KG

Dimensional drawing

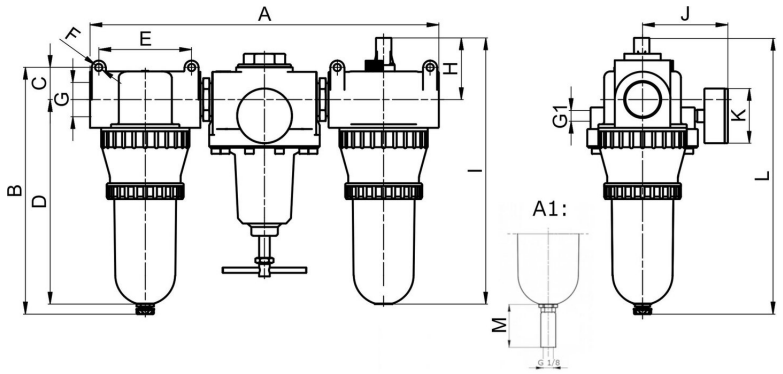

A1: automatic drain valve

Connection G	A	B	C	D	E	F	G1	H	I	J	K	L	M
G11/4"	431	280	36,5	232	105	8,5	G1/4"	70	302	97	63	313,5	34
G11/2"	395	280	36,5	232	105	8,5	G1/4"	70	302	97	63	313,5	34

Connection	Flow rate at 6 bar* [Nl/min]	max. inlet pressure [bar]	Pressure range [bar]	Weight [approx. kg]	Type
G11/4"	5500	16	0,5...10	3,8	MU304-114-0,5/10
G11/4"	5500	16	0,5...10	4,3	MU304-114-0,5/10-P
G11/4"	5500	20	0,5...16	4,1	MU304-114-0,5/16-M
G11/2"	5500	16	0,5...10	3,6	MU304-112-0,5/10
G11/2"	5500	16	0,5...10	4,1	MU304-112-0,5/10-P
G11/2"	5500	20	0,5...16	4,0	MU304-112-0,5/16-M

*Flow rate data at inlet pressure of 8bar, outlet pressure of 6bar and 1bar Pressure drop

Flow diagram, Oiler response threshold

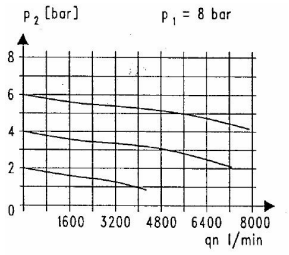

Flow diagram

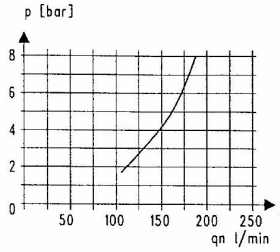

Oiler response threshold

Accessories

Designation	Type
Holding angle for pressure regulators	MMB04-34/112

Illustrations non-binding
Design, dimensional and material changes reserved

+43 512 52076
austria@stasto.eu
© STASTO Automation KG