Partnership. With Guarantee.

Stainless steel ball valves with electric actuator 1/2" up to 2"
Series 8E003



Design type	Electric geared motor with additional manual override, Actuator heater and Torque monitoring
Connection	RP1/2"...RP2" according to ISO7/1
Materials Standard version	Actuator: Polymer housing PA6 or rather PA66 Ball valve: Body and ball stainless steel 1.4401, Ball seal PTFE, Spindle seal PTFE/FKM
Application range	gaseous and liquid media that do not attack the materials used
Medium temperature	0..+100°C
Ambient temperature	-20...+55°C
Operating pressure	0bar up to Operating pressure according to table and pressure-temperature diagram, not suitable for vacuum
Mounting type	Installation in rigid piping system
Mounting position	any, except hanging downward

Electrical data:

Voltage type	AC and DC voltage
Standard voltage	see table "Electrical data"
Permissible voltage fluctuation	± 10%
Electrical Connection	via cable gland PG11
End position shut-off	via built-in limit switches
Duty cycle	see table "Electrical data", however max. 100 switching cycles per day
Degree of protection	
Special version	higher medium temperatures, Battery pack for safety position, Positioner
Ordering note	When ordering, please also specify the operating medium, operating pressure and operating temperature.
Application note	The pressure and temperature specifications are maximum values for normal conditions, for lubricating or non-degreasing media. Degreasing media in particular reduce the specified values and increase the required torque. For these special cases, we recommend prior consultation.

+43 512 52076
austria@stasto.eu
© STASTO Automation KG

Order code

		8E003	001 - 1/2"
	12V/50-60Hz/12VDC	001	
	24V/50-60Hz/24VDC	002	
Voltage	100-240V/50-60Hz	004	
Connection	RP1/2"		1/2"
	RP3/4"		3/4"
	RP1"		1"
	RP11/4"		11/4"
	RP11/2"		11/2"
	RP2"		2"

Dimensions

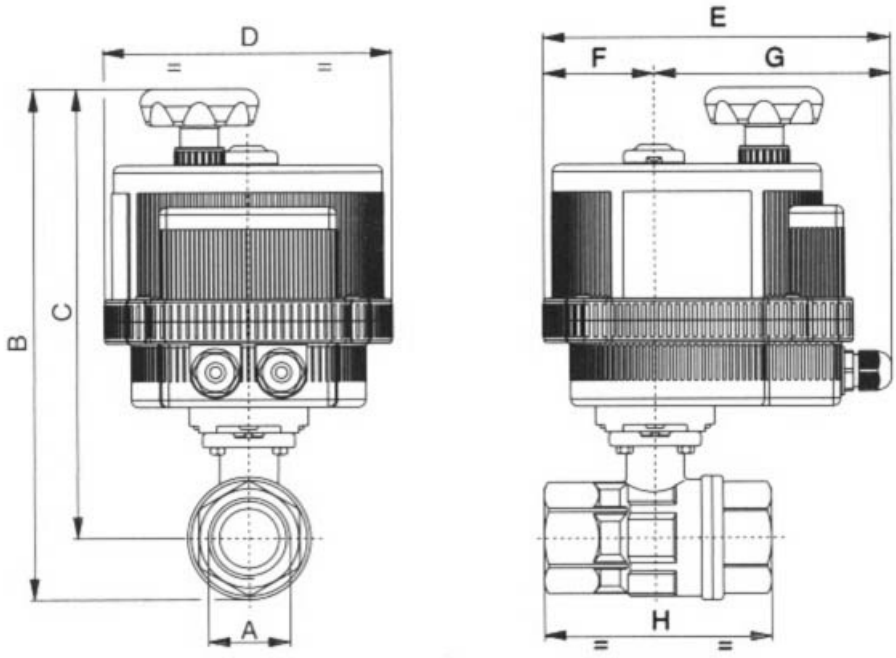

Connection A	Nominal size DN[mm]	max. Operating pressure [bar]	B	C	D	E	F	G	H	Kv value [m^3/h]	Weight [approx. kg]	Actuator type	Type
RP1/2"	15	64	192	175	123	164	43	121	67	16,3	1,8	VB015	8E003...-1/2"
RP3/4"	20	64	198	177	123	164	43	121	78	29,5	1,8	VB015	8E003...-3/4"
RP1"	25	64	213	187	123	164	43	121	90	43	2,2	VB015	8E003...-1"
RP11/4"	32	64	223	190	123	164	43	121	100	89	2,5	VB015	8E003...-11/4"
RP11/2"	40	64	290	251	157	191	61	130	112	230	4,1	VB030	8E003...11/2"
RP2"	50	64	309	261	157	191	61	130	135	265	5,3	VB030	8E003...-2"

+43 512 52076
austria@stasto.eu

© STASTO Automation KG

Electrical data

Type	Voltage	Current consumption [A]	Rated torque [Nm]	Duty cycle (S3)	Actuation time [Sek.]
VB015 -L-12	12V/50-60Hz/12VDC	1,2	15	AC 50% / DC 75%	10
VB015-L-24	24V/50-60Hz/24VDC	0,6	15	AC 50% / DC 75%	10
VB015-H	100-240V/50-60Hz	0,3-0,19	15	75%	10
VB030-L-12	12V/50-60Hz/12VDC	AC 2,2 / DC 1,8	30	50%	8
VB030-L	24V/50-60Hz/24VDC	AC 1,0 / DC 0,7	30	75%	8
VB030-H	100-240V/50-60Hz	0,4-0,2	30	75%	8

Electrical connection example VB015

Type VB015-L

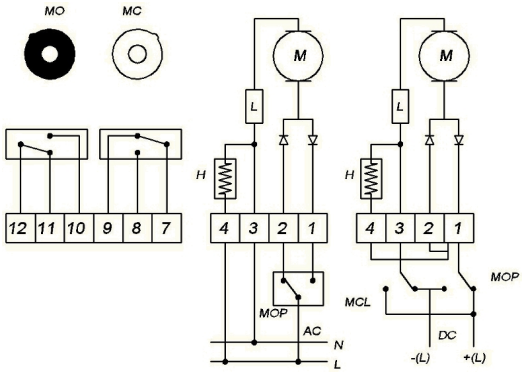

Type VB015-H

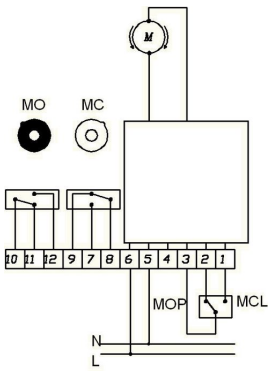

Position	Description	Note
H	Heater	Standard
L	Torque limiter	Standard
MC	End position feedback signals CLOSED	Standard max. 1A/250VAC-1A/30VDC
MO	End position feedback signals ON	Standard max. 1A/250VAC-1A/30VDC
MCL	Actuator CLOSED	
MOP	Actuator OPEN	

+43 512 52076
austria@stasto.eu

© STASTO Automation KG

Electrical connection example VB030

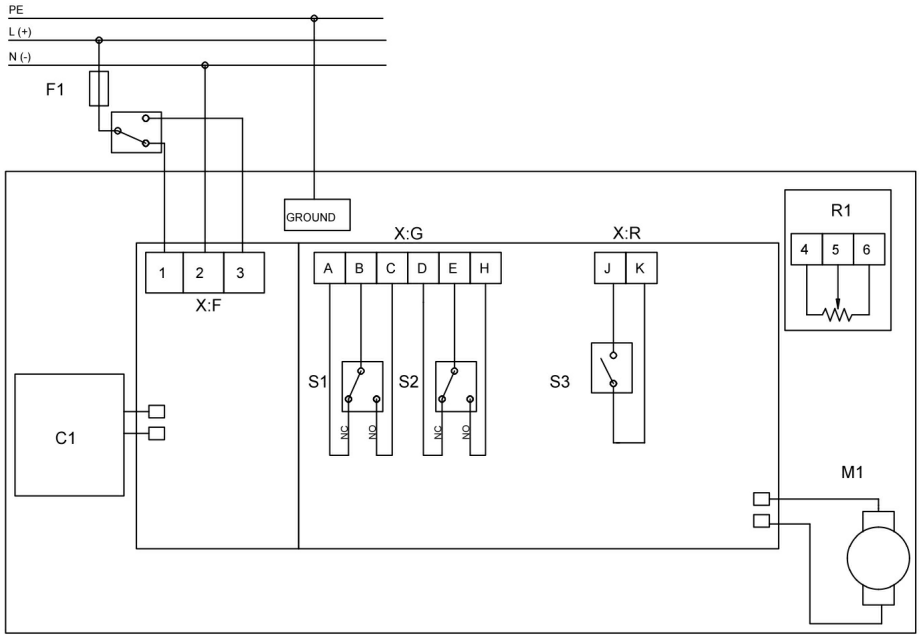

Position	Description	Note
C1	Battery pack for safety position	optional available
R1	Potentiometer 5 KΩ/1W	optional available
S1	End position feedback signals CLOSED	Standard max. 2A/250VAC-2A/30VDC
S2	End position feedback signals ON	Standard max. 2A/250VAC-2A/30VDC
S3	Fault message	Standard max. 1A/120VAC-2A/24VDC
X:F:1	Connection terminal	Actuator CLOSED
X:F:2	Connection terminal	
X:F:3	Connection terminal	Actuator OPEN

2-Point control or 3-point control by changing the electrical connection VB030

3-point control	2-point control
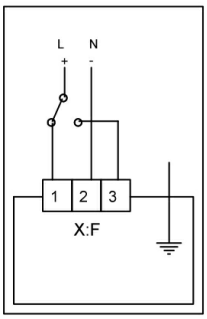	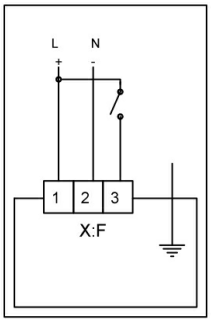

© STASTO Automation KG

Pressure-temperature diagram

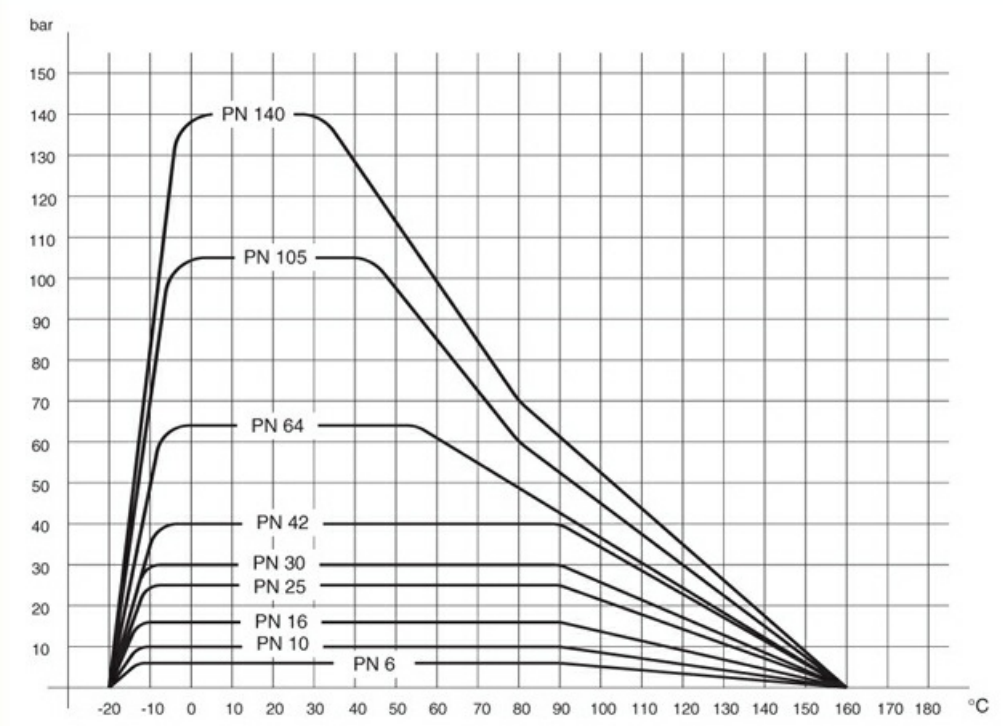

Illustrations non-binding
Design, dimensional and material changes reserved

+43 512 52076
austria@stasto.eu
© STASTO Automation KG