Partnership. With Guarantee.

Brass ball valves
Series BAW1-...-BLTT-MZL

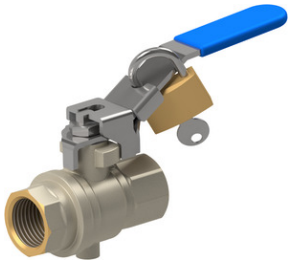

Design type	Shut-off valve with floating ball and Exhaust port, with full bore passage, Hand lever lockable in closed position
Connection	G1/4"...G2" according to ISO228/1
Materials	Body brass CW617N nickel-plated, Ball, brass CW614N, hard chrome-plated, Ball seal PTFE, Spindle seal PTFE, Hand lever steel galvanized with PVC coating
Mounting type	Installation in rigid piping system
Mounting position	any
Application range	Gases and liquids of group 2 in accordance with PED 2014/68/EU that do not attack the materials used.
Medium temperature	-10...+100°C
Operating pressure	0...14bar
Actuation	by 90° rotation of the hand lever
Scope of delivery	Ball valve with hand lever, without padlock VS37

+43 512 52076
austria@stasto.eu
© STASTO Automation KG

Dimensions

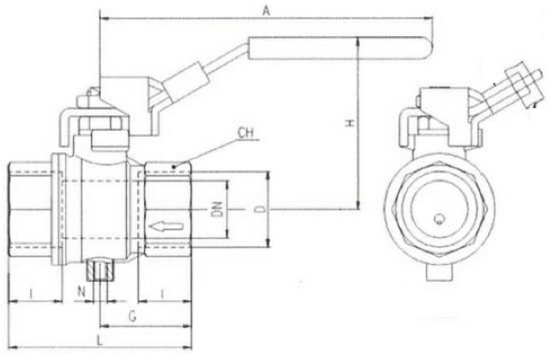

Connection D	Nominal size DN[mm]	PN [bar]	A	CH	G	H	I	L	N	Kv value [m 3 /h]	Weight [approx. kg]	Type
G1/4"	8	14	96	20	22,5	48,5	12	45	M5	5,7	0,17	BAW1-002-BLTT-MZL
G3/8"	10	14	96	20	22,5	48,5	12	45	M5	9	0,16	BAW1-003-BLTT-MZL
G1/2"	15	14	96	25	29,5	51	15,5	59	M5	41	0,24	BAW1-004-BLTT-MZL
G3/4"	20	14	117	31	32	60	17	64	M5	60	0,38	BAW1-005-BLTT-MZL
G1"	25	14	117	40	40,5	64	21	81	M5	80	0,60	BAW1-006-BLTT-MZL
G11/4"	32	14	156,5	49	46,5	80	23	93	G1/4"	115	1,06	BAW1-007-BLTT-MZL
G11/2"	40	14	156,5	54	51	86	23	102	G1/4"	260	1,44	BAW1-008-BLTT-MZL
G2"	50	14	156,5	68	60,5	93	26,5	121	G1/4"	380	2,40	BAW1-009-BLTT- MZL

Operating diagram

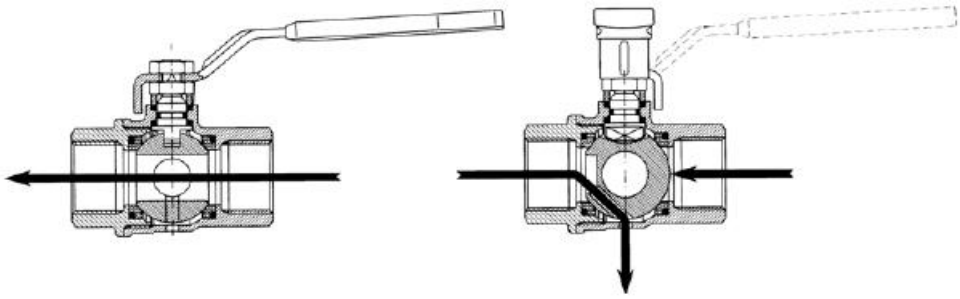

Illustrations non-binding
Design, dimensional and material changes reserved

+43 512 52076
austria@stasto.eu
© STASTO Automation KG