Partnership. With Guarantee.

3/2-Way coaxial valve - direct-acting
Series CVT3-10

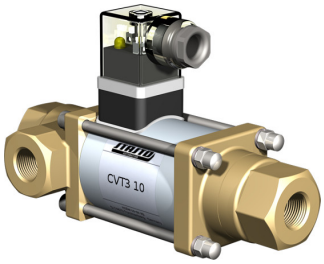

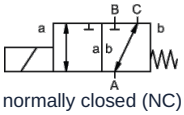

normally closed (NC)

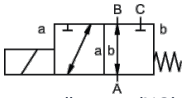

normally open (NO)

Design type	3/2-way coaxial valve, direct-acting, normally closed or normally open
Mode of operation	pressure-relieved, with spring return, non-overlapping
Nominal size	0...16bar / 0...25bar / 0...40bar: DN10mm 0...100bar: DN8mm
Connection	G1/4"...G3/4" , Special flanges and threads on request
Pressure range	0...16 or 0...25, A → B max. 25bar / B → A max. 16bar / A → C max. 25bar / C → A max. 25bar 0...40, A → B max. 40bar / B → A max. 25bar / A → C max. 40bar / C → A max. 25bar 0...100, A → B max. 100bar / B → A max. 75bar / A → C max. 100bar / C → A max. 75bar
Back pressure	P2 > P1, see pressure range
Materials	optional body brass, nickel-plated brass or stainless steel Valve seat Plastic on metal, Sealing materials NBR, FPM, CR, EPDM The material specifications of the versions refer exclusively to the valve connection parts in contact with the medium
Media	gaseous - liquid - contaminated
Flow direction	see pressure range
Mounting type	Installation in rigid piping system, Mounting bracket on request
Mounting position	any
Vacuum Leakage rate	< 10 $^{-6}$ mbar*l*s $^{-1}$
Kv value	0...16bar / 0...25bar: 2,6m³/h 0...40bar: 2,2m³/h 0...100bar: 1,4m³/h
Switching cycles	200/min
Switching time	0...16bar / 0...25bar ON 40ms, CLOSED 25ms 0...40bar / 0...100bar ON 135ms, CLOSED 20ms
Medium temperature	-10...+80°C (Special version -30...+120°C)
Ambient temperature	-10...+80°C
Approvals	on request LR/GL/EN10204
Weight	0...16bar / 0...25bar 2,2kg 0...40bar / 0...100bar 2,5kg
Options	Vacuum tests with certificate, Version ATEX

+43 512 52076
austria@stasto.eu
© STASTO Automation KG

Voltage type	AC and DC voltage
Standard voltage	230V/40-60Hz, 24VDC, Permissible voltage fluctuation ±10%
Special voltages	on request
Solenoid system	DC DC solenoid, AC DC solenoid with integrated rectifier
Insulation class	H 180°C
Current consumption	N-coil 24VDC 1A, 230VAC 0,13A, H-coil 24VDC 1,29A, 230VAC 0,16A
Duty cycle	100% (Continuous operation)
Degree of protection	IP65 according to EN 60529 with correctly mounted device connector (protection against dust ingress and water jets)
Scope of delivery	incl. connector according to EN175301-803 Form A, Cable entry M16x1,5
optional	Device connector according to DESINA, connector to vdma, Terminal box M16x1,5 on request
Additional equipment	Illuminated connector with varistor
Ordering information	Nominal size, Connection, Function NC/NO, Operating pressure, Flow rate, Medium, Medium temperature, Ambient temperature, Rated voltage
Application note	The technical design of the valves is media- and application-specific, which may result in deviations from the general specifications stated in the data sheet with regard to version, sealing materials and characteristic values. In the event of inaccurate or incomplete ordering information or application data, there is a risk of incorrect technical sizing of the valves for the intended application purpose. This may result in the physical and/or chemical properties of the materials or seals used being insufficient for the intended application purpose.

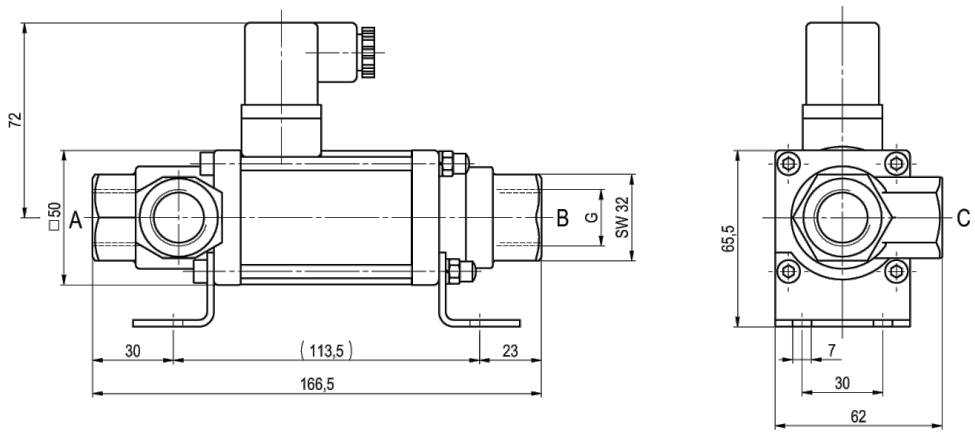

CVT3-10 Function NC 0...16bar / 0...25bar

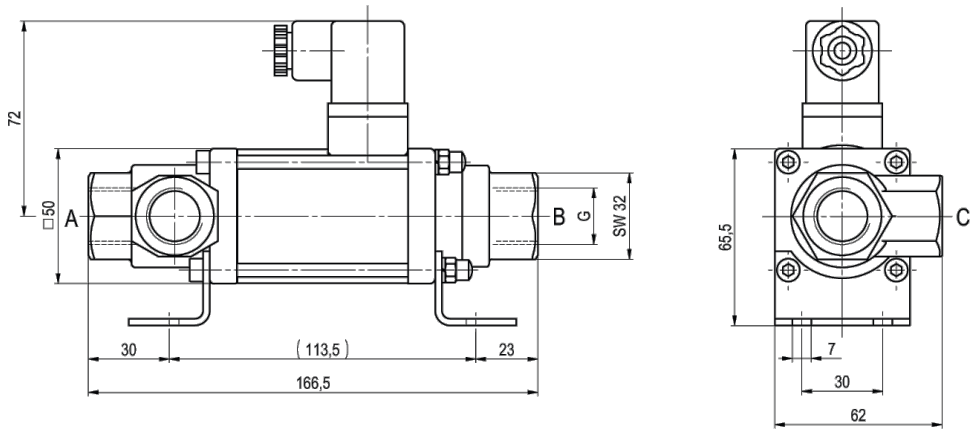

CVT3-10 Function NO 0...16bar / 0...25bar

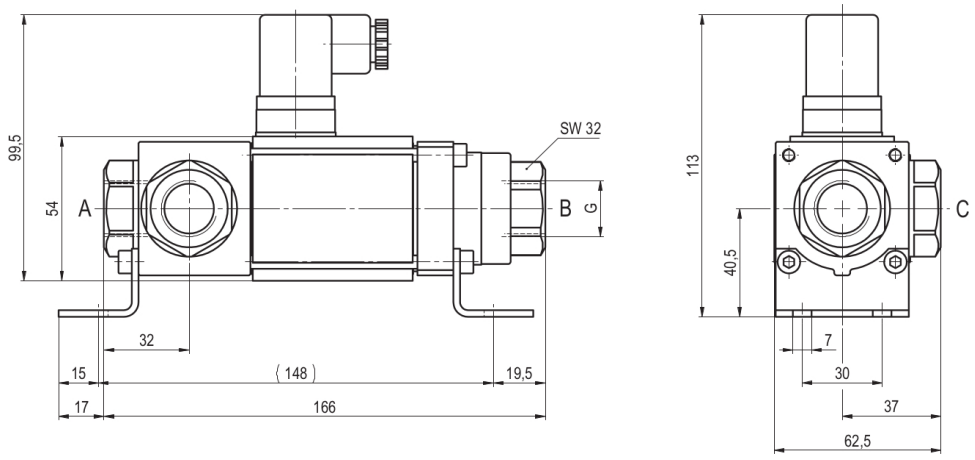

CVT3-10 Function NC 0...40bar / 0...100bar

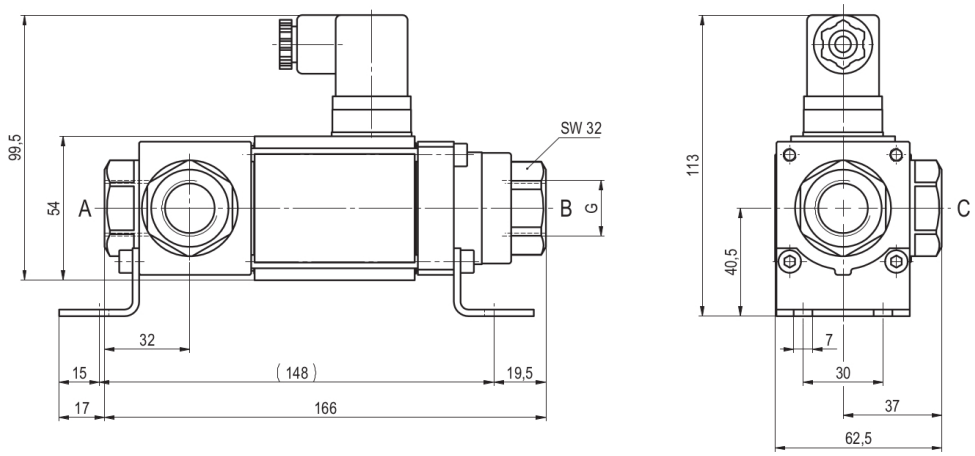

CVT3-10 Function NO 0...40bar / 0...100bar

Mounting brackets must be ordered separately

Electrical connections



M12x1 DESINA / VDMA



DIN EN 175301-803

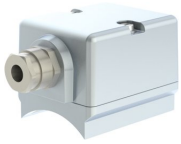

Terminal box



Form A connector
DIN EN 175301-803

Illustrations non-binding
Design, dimensional and material changes reserved

+43 512 52076
austria@stasto.eu
© STASTO Automation KG