Partnership. With Guarantee.

2/2-Way solenoid valve - combined-operated
Series 21IH



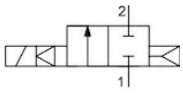

de-energized closed

Design type	2/2-way solenoid valve with diaphragm seal, combined-operated, normally closed
Connection	G3/8"...G11/2" according to ISO228/1
Materials	Body Stainless steel 1.4408, Internal parts Stainless steel similar to 1.4104, Seals FKM
Mounting type	Installation in rigid piping system
Mounting position	preferably with upright electrical part
Application range	gaseous and liquid media that do not attack the materials used
Viscosity	max. 12mm^2/s (cst)
Switching time	depending on operating pressure and medium
Medium temperature	depending on the sealing material and Solenoid coil
Ambient temperature	see table "Solenoid coils"

Electrical data:

Coil type	Type BDA, Connector width 32mm (Standard coil) Type BDV, Connector width 32mm (Coil for humid environment) Type GDH/GDV, Connector width 32mm (Coil for higher pressures, Coil for humid environment)
Electrical connection	connector according to EN175301-803 form A (see separate data sheet)
Voltage type	AC and DC voltage
Standard voltage	230V/50-60Hz, 24V/50-60Hz, 24VDC
Special voltages	12...380V/50Hz or 60Hz, 12...220VDC
Permissible voltage fluctuation	AC +10%/-15% DC +10%/-5%
Power consumption	see table "Power consumption of the solenoid coils"
Duty cycle	100% Duty cycle (continuous operation)
Degree of protection	IP65 according to EN 60529 with properly mounted device connector (protection against dust ingress and water jets)
Application note	When ordering, please specify voltage and type of current. We always recommend installing a strainer upstream to prevent malfunctions in the event of contamination of the medium. These valves can also be used for rough vacuum.

+43 512 52076
austria@stasto.eu
© STASTO Automation KG

Type code

	21IH	3	K1	V	150	-	BDA	-	230V/50-60Hz
	G3/8"	3							
	G1/2"	4							
	G3/4"	5							
	G1"	6							
	G11/4"	7							
Connection	G11/2"	8							
	NBR			B					
Seal	FKM			V					
	15mm				150				
	16mm				160				
	20mm				200				
	25mm				250				
	35mm				350				
Nominal size	40mm				400				
	BDA Standard coil - Approval CE						BDA		
	BDV Coil for humid environment - Approval CE-CSA-UL-VDE						BDV		
	GDV Coil for higher pressures - Coil for humid environment - Approval CE-CSA-UL-VDE						GDV		
Coil	GDH Coil for higher pressures - Coil for humid environment - Approval CE						GDH		
	230V/50-60Hz								230V/50-60Hz
	24V/50-60Hz								24V/50-60Hz
	24VDC								24VDC
	12...380V/50Hz or 60Hz								
Voltage	12...220VDC								

Applications of the individual sealing materials

Material	Medium temperature	Application examples
FKM	-10...140°C	Gasoline, Diesel, Air, neutral gases and liquids, Oils, Water
NBR	-10...90°C	Air, neutral gases and liquids, Oils, Water

Solenoid coil

Type	Degree of protection	Insert	Ambient temperature	Approvals
BDA	IP65	Medium temperature up to max. 120°C	-10...+40°C	CE
BDV	IP65	Medium temperature up to max. 180°C, high humidity	-20...+60°C	CE-CSA-UL-VDE
GDH	IP65	Medium temperature up to max. 180°C, high humidity	-20...+40°C	CE
GDV	IP65	Medium temperature up to max. 180°C, high humidity	-20...+60°C	CE-CSA-UL-VDE

© STASTO Automation KG

Power consumption of the solenoid coils

Voltage	Tightening torque (Alternating current) VA	Holding force (Alternating current) VA	Holding force (Alternating current) W	Holding force (Direct current) operating temperature W	Type
12VDC	-	-	-	8	BDA08012CS
24V/50-60Hz	25	14,5	8	-	BDA08024DS
24VDC	-	-	-	8	BDA08024CS
42V/50Hz	25	14,5	8	-	BDA08042AS
48V/50Hz	25	14,5	8	-	BDA08048AS
110VDC	-	-	-	8	BDA08110CS
110V/50-60Hz	25	14,5	8	-	BDA08110DS
115V/60Hz	25	14,5	8	-	BDA08115BS
220-230V/50-60Hz	25	14,5	8	-	BDA08223DS
380V/50-60Hz	25	14,5	8	-	BDA08380DS
24VDC	-	-	-	11	BDV08024CY
24V/50-60Hz	25	17	8	-	BDV08024DY
110V/50Hz 115V/60Hz	25	15	8	-	BDV080110AY
230V/50Hz 240V/60Hz	25	16	8	-	BDV08230AY
12VDC	-	-	-	14	GDH14012CS
48VDC	-	-	-	14	GDH14048CS
220VDC	-	-	-	14	GDH14220CS
24VDC	-	-	-	14	GDV14024CY
24V/50-60Hz	43	27	14	-	GDV14024DY
230V/50Hz 240V/60Hz	43	27	14	-	GDV14230AY
110V/50Hz 120V/60Hz	43	27	14	-	GDV14110AY

+43 512 52076
austria@stasto.eu
© STASTO Automation KG

Dimensions

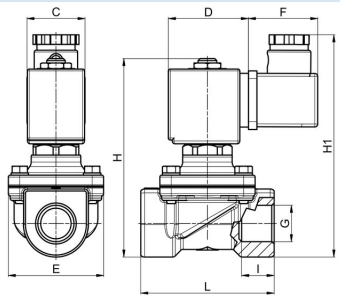

Connection G	Nominal size DN[mm]	Pressure range [bar] AC	Pressure range [bar] DC	C	D	E	F	H	H1	I	L	Kv value [m^3/h Water]	Weight [approx. kg]	Coil	Type
G3/8"	15	0-14	0-6	30	42	52	36	92	106	12	68	2,4	0,45	BD.	21IH3K1V150
G3/8"	15	0-14	0-14	52	55	52	36	92	106	12	68	2,4	0,75	GD.	21IH3K1V150
G1/2"	16	0-14	0-6	30	42	52	36	92	106	14	68	3,0	0,66	BD.	21IH4K1V160
G1/2"	16	0-14	0-14	52	55	52	36	92	106	14	68	3,0	0,96	GD.	21IH4K1V160
G3/4"	20	0-14	0-6	30	42	58	36	100	114	16	75	3,6	0,66	BD.	21IH5K1V200
G3/4"	20	0-14	0-14	52	55	58	36	100	114	16	75	3,6	0,96	GD.	21IH5K1V200
G1"	25	0-14	0-3	30	42	65	36	109	123	18	90	8,4	0,90	BD.	21IH6K1V250
G1"	25	0-14	0-14	52	55	65	36	109	123	18	90	8,4	1,20	GD.	21IH6K1V250
G11/4"	35	0-8	-	30	42	94	36	126	140	21	128	18,0	2,50	BD.	21IH7K1V350
G11/4"	35	0-14	0-2	52	55	94	36	126	140	21	128	18,0	2,80	GD.	21IH7K1V350
G11/4"	35	-	0-7	52	55	94	36	126	140	21	128	15,0	2,80	GD.	21IH7K1V350-S
G11/2"	40	0-8	-	30	42	94	36	126	140	21	128	19,2	2,30	BD.	21IH8K1V400
G11/2"	40	0-14	0-2	52	55	94	36	126	140	21	128	19,2	2,60	GD.	21IH8K1V400
G11/2"	40	-	0-7	52	55	94	36	126	140	21	128	15,0	2,60	GD.	21IH8K1V400-S

Illustrations non-binding
Design, dimensional and material changes reserved

+43 512 52076
austria@stasto.eu
© STASTO Automation KG