Partnership. With Guarantee.

3/2 - Way coaxial valve - pilot-operated, DN40
Series CVTV3/CVFV3-40



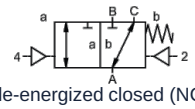

de-energized closed (NC)

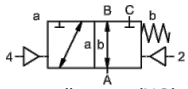

normally open (NO)

Type designation	CVTV3-40, CVFV3-40, with pilot valve CVTV3-P-40, CVFV3-P-40
Design type	3/2-way coaxial valve, pilot-operated, normally closed or de-energized open
Mode of operation	pressure-relieved, with spring return, non-overlapping
Nominal size	DN 40mm
Connection	CVTV3: G11/2"...G2", CVFV3: Flanges PN16/40, Special flanges and threads on request
Pressure range	0-16 or 0-40 bar, A → B max. 40bar / B → A max. 16bar / A → C max. 40bar / C → A max. 40bar
Back pressure	P2 > P1, see Pressure range
Materials	optional Body Steel galvanized, Steel nickel-plated, non-ferrous metal-free or Stainless steel Valve seat Plastic on metal, Sealing materials PTFE, NBR, FPM, CR, EPDM The material specifications of the versions refer exclusively to the valve connection parts that come into contact with the medium
Media	gaseous - liquid - contaminated - high-viscosity - gelatinous - paste-like
Flow direction	see Pressure range
Mounting type	Installation in rigid piping system, Mounting bracket on request
Mounting position	any
Vacuum Leakage rate	< 10^{-6}mbar*l*s^{-1}
Kv value	29,1m³/h
Switching cycles	150/min.
Switching time	ON 100-3000ms, CLOSED 100-3000ms
Cushioning	ON/CLOSED: via throttling of the pilot valve
Medium temperature	with flange-mounted pilot valve up to +60°C (Pilot valve outside the temperature range medium temperature max. 160°C)
Ambient temperature	with flange-mounted pilot valve up to +50°C
Manual emergency override	via pilot valve
Approvals	on request LR/GL/EN10204
Weight	CVTV3 8,9kg, CVFV3 11,6kg
Options	Vacuum tests with certificate, Limit switch inductive (Normally closed (NC) PNP- Icomatic/Balluf), Limit switch inductive NAMUR (+ Switching amplifier), Limit switch mechanical (Changeover contact) on request, Flushing ports, Leakage ports

Voltage type	AC and DC voltage
Standard voltage	230V/40-60Hz, 24VDC, Permissible voltage fluctuation ±10%

+43 512 52076
austria@stasto.eu
© STASTO Automation KG

Special voltages	on request
Power consumption	DC: 4,8W (2,5W on request), AC: Tightening torque 11,0VA, Holding force 8,5VA
Duty cycle	100% (Continuous operation)
Degree of protection	IP65 (IP54) according to DIN 40050 with properly mounted device socket (protection against dust ingress and water jets)
Scope of delivery	incl. connector according to EN175301-803-Form B (formerly DIN43650) or rather Industrial design form - Cable entry M16x1,5
optional	Device connector according to DESINA, Device connector according to VDMA
Additional equipment	Illuminated connector with varistor
Explosion protection	Eex m II T5, Power consumption 24VDC: 3,25W, 230VAC: 2,90W
	Actuation pneumatic
Pilot pressure range	4-10bar
Air consumption	34cm³/Stroke
Switching speed	Main valve infinitely adjustable via throttles of the pilot valve
Control	preferably via 5/2-way pilot valve
Connection diagram	co-ax/NAMUR, (ISO 1 on request)
Control ports	2/4: G1/8" (G1/4" on request)
	Actuation hydraulic
Pilot pressure range	10-30bar/30-60bar
Control	preferably via 4/2-way pilot valve
Control ports	X/Y: G1/4" (NPT 1/4 on request)
Ordering information	Nominal size, Connection, Function NC/NO, Operating pressure, Flow rate, Medium, Medium temperature, Ambient temperature, Rated voltage, Rated voltage Limit switch, Actuation, Pressure port A, B, or C
Application note	The technical design of the valves is media- and application-specific, which may result in deviations from the general information stated in the data sheet with regard to version, sealing materials and characteristic values.. In the case of inaccurate or incomplete ordering information or application data, there is a risk of incorrect technical sizing of the valves for the intended application.. This may result in the physical and/or chemical properties of the materials or seals used being insufficient for the intended application purpose.

+43 512 52076
austria@stasto.eu
© STASTO Automation KG

Dimensions

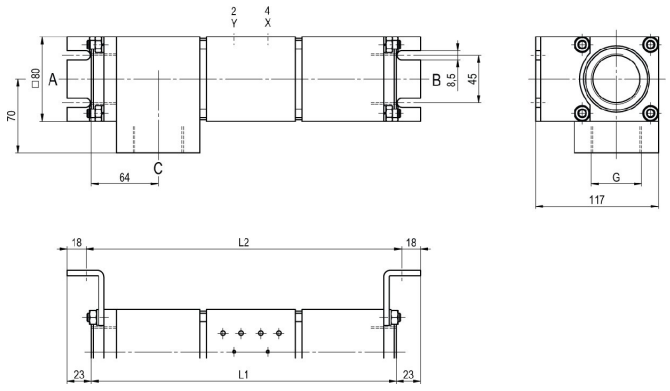

CVTV3-40 Function NC

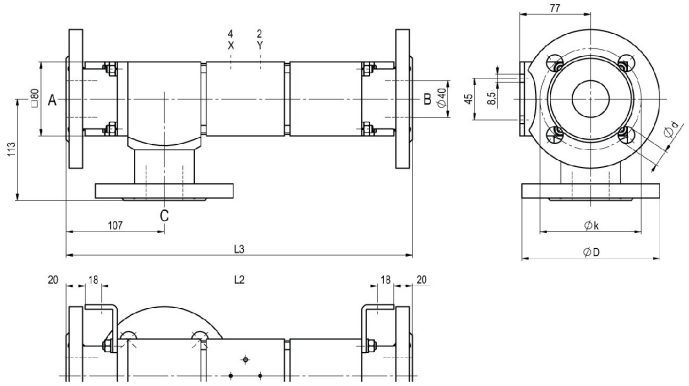

CVFV3-40 Function NO

Installation lengths	L1	L2	L3
Standard	291	301	377
with 1/2 inductive limit switches	338	348	424
with mechanical limit switches	-	-	-

Flange PN	DIN	ØD	Øk	Ød
16	EN 1092-1	150	110	18
40	EN 1092-1	150	110	18

Mounting brackets must be ordered separately

Pilot valves



Pilot valve ABS56
5/2-way valve NAMUR, electropneumatic, G1/4, with exhaust air flow controls, p = 4 - 10bar

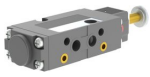

Pilot valve
5/2-way valve NAMUR, electropneumatic, G1/8, with exhaust air flow controls, p = 4 - 10bar



Pilot valve
5/2-way valve ISO1, electropneumatic, G1/4, p = 4 - 10bar



Pilot valve
5/2-way valve co-ax, electropneumatic, G1/4, p = 4 - 10bar

Electrical connections



electrical connection
Solenoid coil M12x1



electrical connection
Form B connector DIN EN 175301-803
or rather Industrial design form

© STASTO Automation KG

Limit switch



Icomatic Plastic version
M12x1, DC 10 - 60V
AC 15 - 250V
-25...+85°C



Balluff Metal version
M12x1, DC 10 - 30V
-25...+70°C



Honeywell
Changeover contact

Illustrations non-binding
Design, dimensional and material changes reserved

+43 512 52076
austria@stasto.eu
© STASTO Automation KG